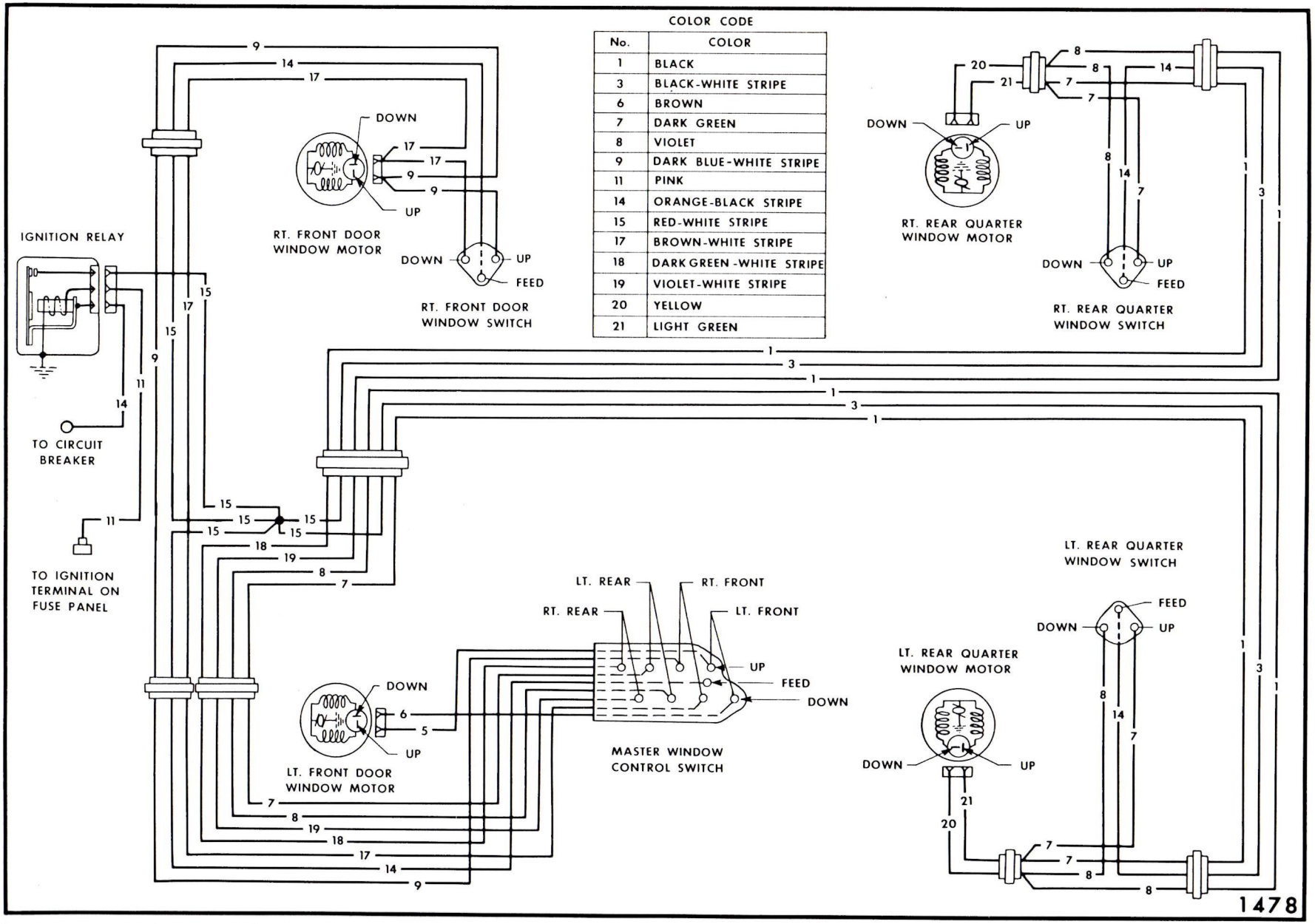

COLOR CODE

No.	COLOR
1	BLACK
3	BLACK-WHITE STRIPE
6	BROWN
7	DARK GREEN
8	VIOLET
9	DARK BLUE-WHITE STRIPE
11	PINK
14	ORANGE-BLACK STRIPE
15	RED-WHITE STRIPE
17	BROWN-WHITE STRIPE
18	DARK GREEN-WHITE STRIPE
19	VIOLET-WHITE STRIPE
20	YELLOW
21	LIGHT GREEN

Fig. 2L7—Power Window Circuit Diagram - 33000 Series

Tech Archives
Digitally signed by Tech Archives
DN: cn=Tech Archives, o=Northstar Chevelle Club, ou, email=webmaster@northstarchevelles.com, c=US
Date: 2012.03.17 16:57:41 -05'00'